seaVIEW

seaSCREEN
Pleated

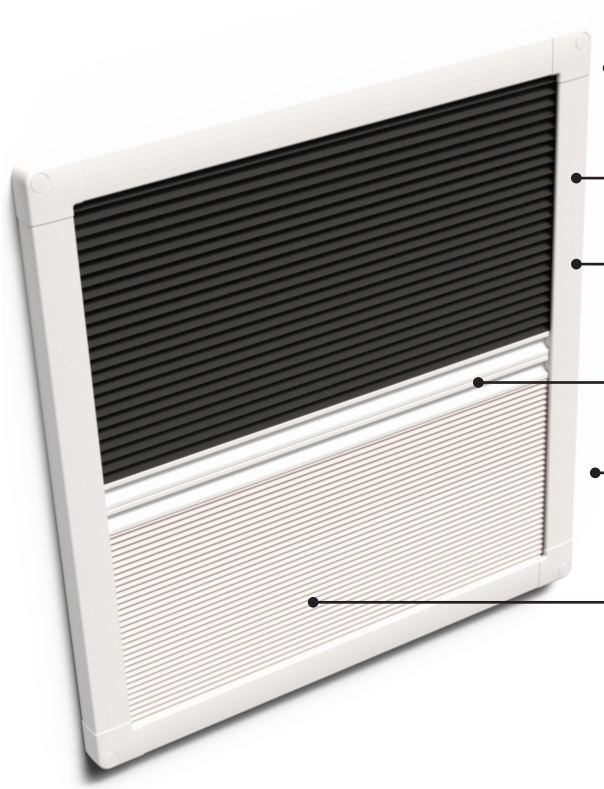

- Integrated fixing covers
- Elegant pleated flyscreen
- Discreet low profile frame
- Full length handle for easy operation
- Unique assembly system ensures smooth operation and 'rattle-free' hardware when under way
- Honeycomb pleated fabric for complete blackout, insulation and concealed cording

Surface-mounted pleated blind and flyscreen to fit any size marine hatch

- Elegant pleated blind and flyscreen combined
- Onboard privacy and comfort
- Cabin light and temperature control
- Reduce UV damage
- Reduce glare
- Insect control
- Easy installation
- Low profile design with small footprint

Flyscreen

The Seaview pleated flyscreen allows fresh air to flow in through the fabric, while keeping minute insects out, as well as offering a long-lasting UV stable solution.

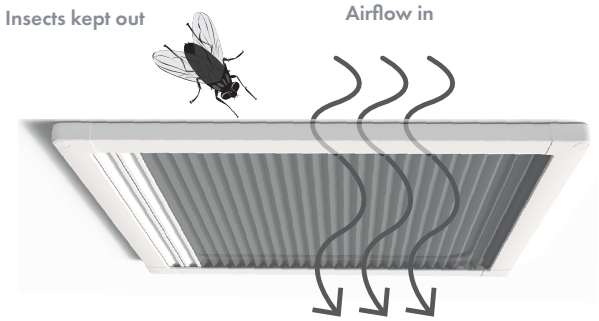

Cabin temperature

By controlling light transmission and reflecting heat, hatch screens help control cabin temperature

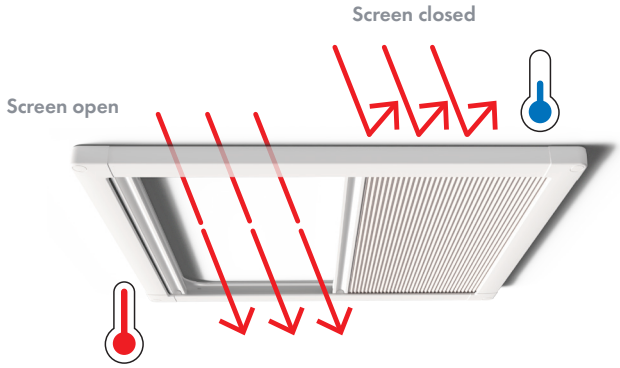

seaVIEW

seaSCREEN
Pleated

Discreet low profile design with small frame footprint

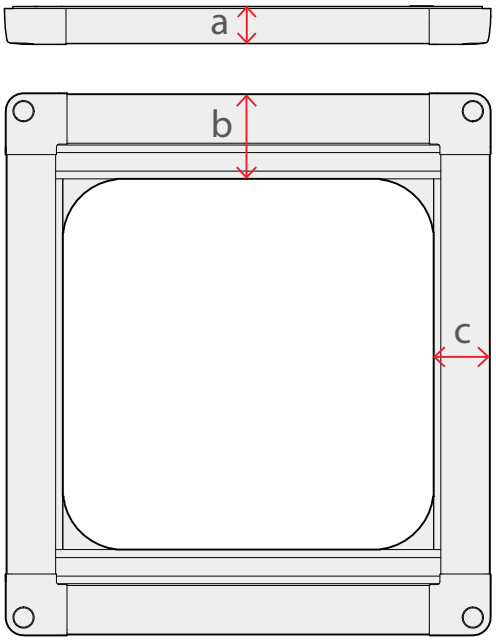

a: Frame depth: 27mm
b: Stowed crossbar to frame outer: 60mm
c: Frame width: 40mm

For a near seamless finish between hatch and SEASCREEN, an additional liner simply clicks into the SEASCREEN frame and slots behind the hatch flange. Available with a corner radius of R42mm and with score lines spaced at 10mm intervals, the user-friendly liner is easily trimmed to any height from a maximum of 110mm.

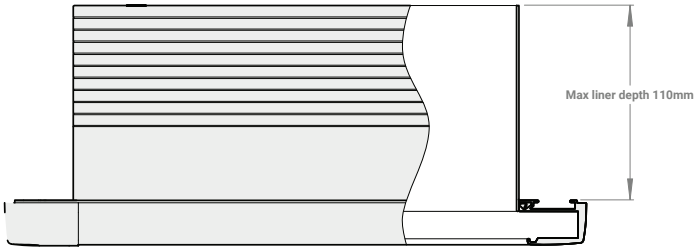

SEASCREEN Pleated

Available in the following standard sizes:

Part No.	To fit hatch	Width (W)		Drop (H)	
10	Lewmar 10	261mm	(10 1/4")	261mm	(10 1/4")
20	Lewmar 20	347mm	(13 5/8")	203mm	(8")
30	Lewmar 30	457mm	(18")	327mm	(12 7/8")
44	Lewmar 44	442mm	(17 3/8")	442mm	(17 3/8")
50	Lewmar 50	507mm	(20")	377mm	(14 7/8")
54	Lewmar 54	507mm	(20")	392mm	(15 3/8")
60	Lewmar 60	507mm	(20")	507mm	(20")
70	Lewmar 70	627mm	(24 5/8")	627mm	(24 5/8")
77	Lewmar 77	699mm	(27 1/2")	699mm	(27 1/2")

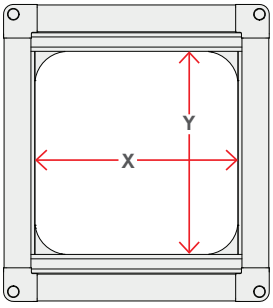

Minimum and maximum dimensions:

	Width (W)	Drop (H)
Minimum	180mm	180mm
Maximum	1200mm	1800mm*

- The standard blind format is blackout one end and flyscreen the other.
- There are options for blackout at both ends (blackout/blackout) or flyscreen at both ends (flyscreen/flyscreen).
- There is also an option to have the blinds full travel or meet-in-the-middle.
- Blinds with a drop over 1200mm will have a screw fixing hole in the side rails.

* Note that meet in the middle blinds can have a maximum drop of 2500mm.

Hardware colour options

White Ivory

Fabric colour options

White Ivory